CHANCCTV
Sharper Optical Lens

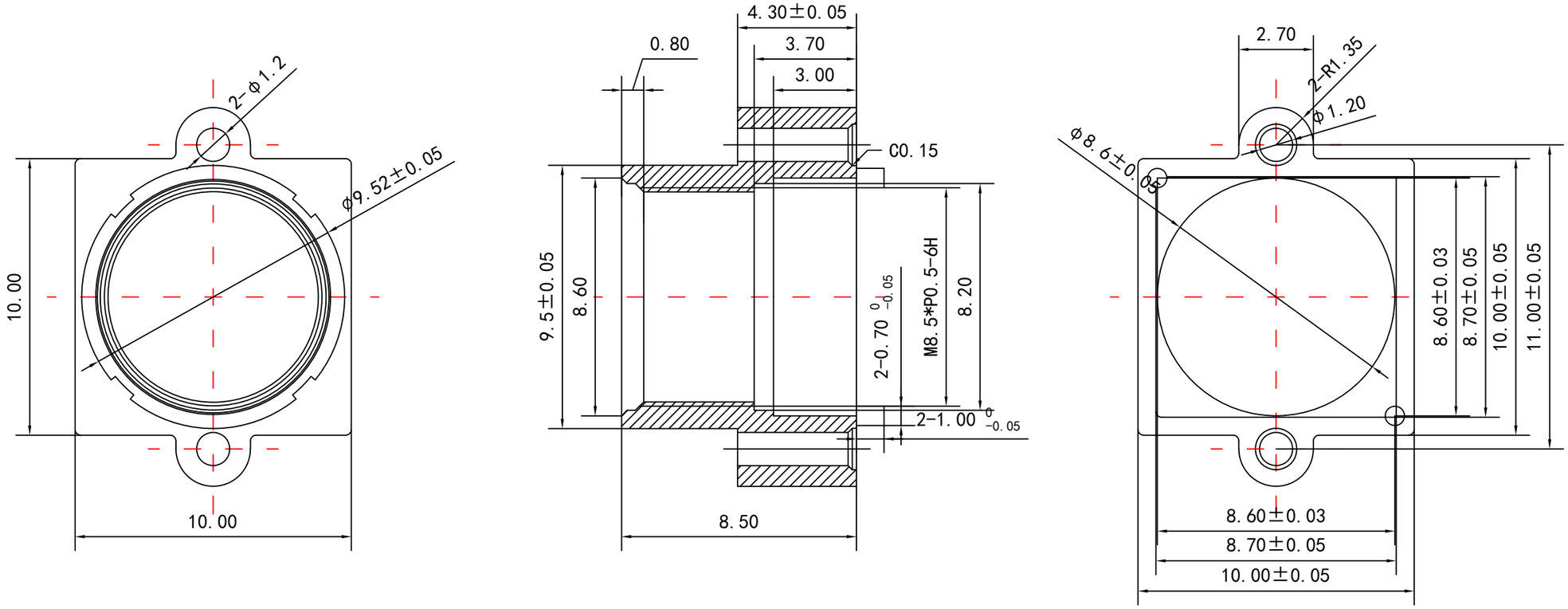

1	Product No.	CH5302A	Scale	Remark	Tolerances	Date	Revised		福州创安光电科技有限公司 FUZHOU CHUANGAN OPTICS CO., LTD
2	Material Type	LCP	4：1	X	±0.2	2019-08-21	CH5302A Rev1.0		
3	Operating Temperature	-20° ~+85°		X.0	±0.15				
4	Storage Temperature	-20° ~+85°	Units	X.00	±0.10	Design	Linda	2019-02-23	3D Angle Projection
5	Adaptable Products	---		X.000	±0.001	Checked	Anna	2019-02-25	
6		---	mm	Angle	±0.5°	Approval	Sanmu	2019-02-26	