CHANCCTV
Sharper Optical Lens

PRODUCT: CH1116A

1	Type		Low Distortion Lens
2	Resolution		12MP
3	Image Format		1/1.8″
4	Image Circle		ϕ9.0mm(MAX)
5	EFL		5.5mm
6	TTL		24.64mm
7	F/NO.		2.8
8	FFL（M)		6.00mm
9	BFL（O)		6.72mm
10	For Sensor		1/1.8"
11	F.O.V	Horizontal	72°
12		Vertical	43.8°
13		Diagonal	79.4°
14	TV Distortion		<-3%
15	Relative Ill.		>40%
16	Chief Ray Angle		<11.8°
17	M.O.D		0.1m~∞
18	Mount Type		M12*P0.5
19	Dimension Figure		ϕ14.00*L18.56mm
20	Lens Structure		9G
21	IR-Filter		Non-IR
22	Weight		6.5g
23	Iris Operation		Fixed
24	Zoom Operation		Fixed
25	Focus Operation		Manual
26	Operating Temperature		-20° ~+85°
27	Storage Temperature		-20° ~+85°

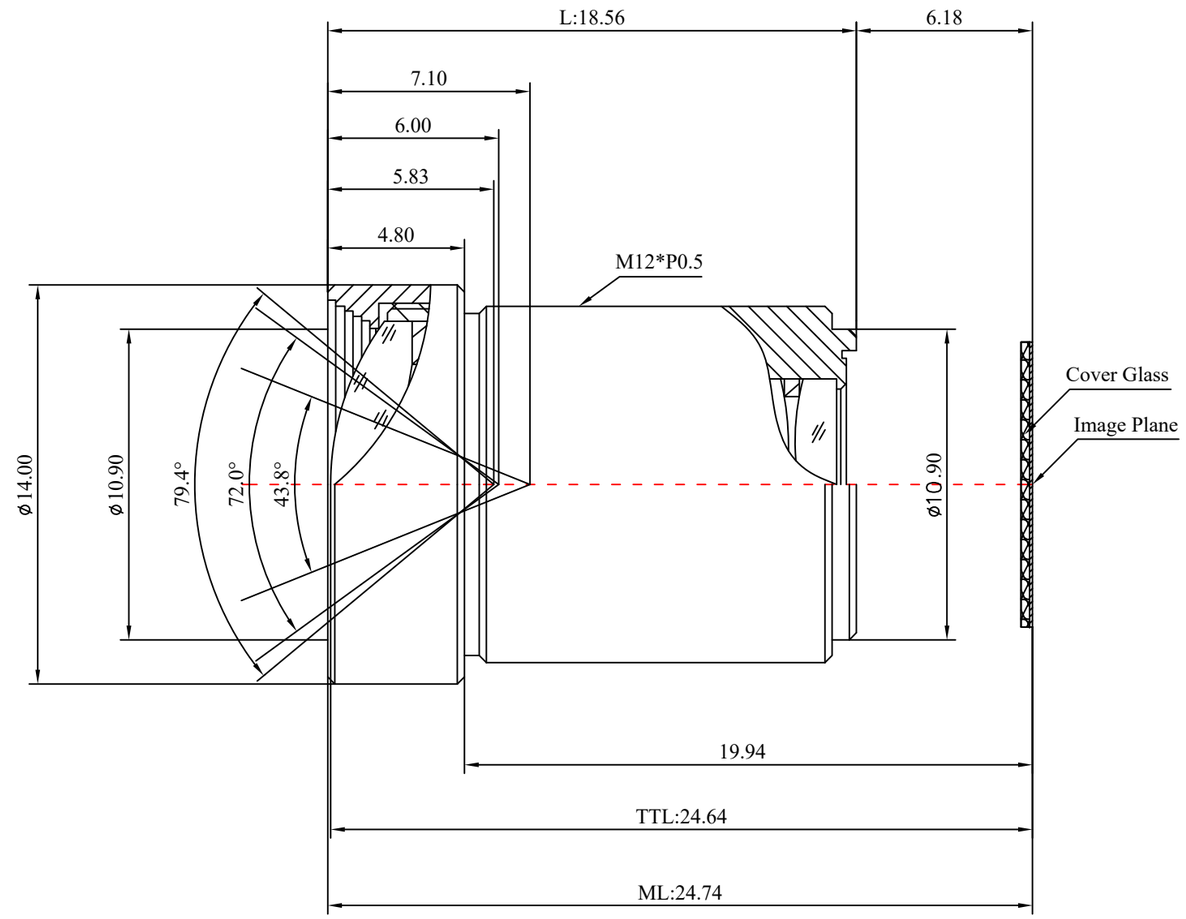

Remark: 刻字 5.5mm F2.8 1/1.8″ CH

Scale	Remark	Tolerances	Date	Revised	
4：1	X	±0.2	2021-09-07	CH1116A Rev1.0	
	X.0	±0.15			
Units	X.00	±0.10	Design	Linda	2021-04-01
	X.000	±0.001	Checked	Anna	2021-05-12
mm	Angle	±0.5°	Approval	Sanmu	2021-07-13

福州创安光电科技有限公司
FUZHOU CHUANGAN OPTICS CO., LTD

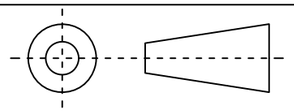

3D Angle Projection